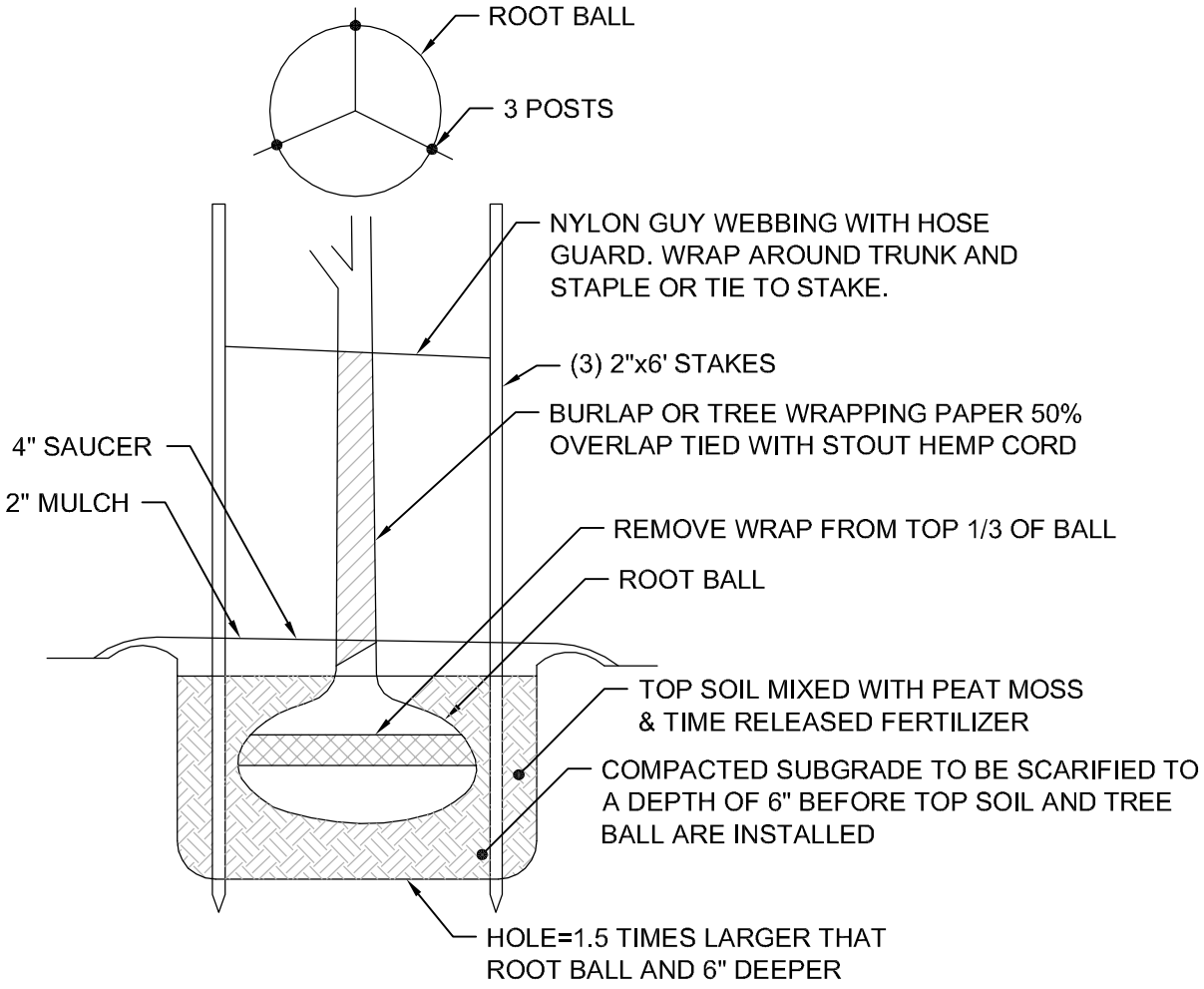

FIGURE 11.4
TOWN OF CHARLESTOWN
TREE PLANTING
NOT TO SCALE